

Better FTTx, Better Life.

October, 2026

Technical Information

FCST-L-SC
LSZH Microduct Straight Connector
-For Indoor

M:+86 18720624696
Email:sales@fcst.com
Tel:+86-21-38726791 38726792

www.fcst.com

www.microductcoupler.com

LSZH Microduct Straight Connector

LSZH Microduct Straight Connector makes connections between microducts quickly and easily in in-building applications, without the need for tools. Transparent design affords greater control when connecting microducts and enables visual confirmation of the presence of a cable.



- For 3-20 mm microducts.
- Easy "push-in" installation.
- Crystal clear transparent body.
- 95% of the material is made of non-metal.
- Tested in accordance to EN 50411-2-8:2009.
- Locking rings to prevent accidental removal of connector.
- Tested in accordance to UL94 V-0: flame resistance for in-building applications.

ISO 9001 Reach RoHS IP68

Product Specifications

Construction	Description
Tube To Connector	LSZH Microduct(Indoor)
Fluid	Air with blowing system
Working Pressure	20 bar
Burst Pressure	25 bar
Estimated Life	25 years
Protection Class	IP68
Water Ingress Test	0.5 bar during 168 hours
Installation Temperature	-15℃ to +45℃
Operation Temperature	-15℃ to +45℃
Transport and Storage Temperature	-15℃ to +45℃
Insertion Force	Size≤12mm,≤ 50 N | Size≥14mm,≤ 120 N
Impact Resistance	1.5J
According To Standards	UL94 V-0,CEI EN 50411-2-8,EN 50411-2-5

Standards

Construction

EN 60529:IP68

EN 61300-2-26: Salt Mist

EN 61300-2-33: Re-entries

UL94-V0 Vertical Burning Test

EN 61300-2-10: Crush Resistance

EN 61300-3-1: Visual Appearance

EN 61300-2-4: Microduct Retention

EN 61300- 2-34: Chemical Resistance

EN 50411-2-8:Annex E:Insertion Force

EN 61386-22: Glow Wire Test at 750℃

EN 60794- 1-2: 2003,Method E4:Impact

EN 50411-2-8:Annex D:Installation Test

EN 61300-2-22: Change of Temperature

EN60794-1-2 Method E1. Tensile Strength

EN 61300-2-38: 2006,Method B:Pressure Loss

EN 50411-2-8:Annex C: High Pressure Resistance

EN 61300-2-23: 1997,Method 2:Water Immersion

EN 61386- 24: Conduit Systems Buried Underground

EN 61300-2-38:2006, Method A:Sealing Performance

Product Material

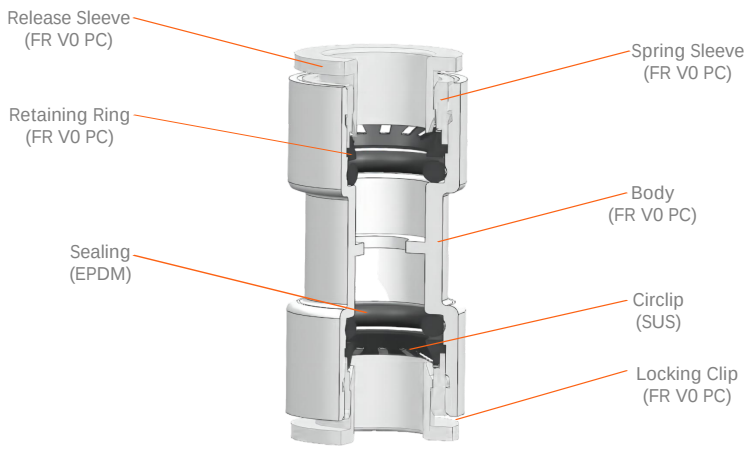

Ordering Information

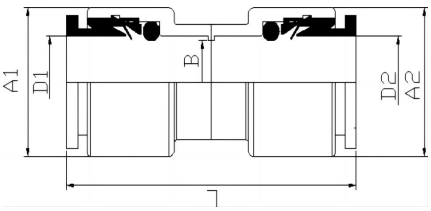

Model	D1 (mm)	D2 (mm)	A1 (mm)	A2 (mm)	B (mm)	L (mm)	Weight(g)
FCST-L-SC3/2.1	3	3	11±0.2	11±0.2	2.1±0.12	30.7±0.5	-
FCST-L-SC5/3.5	5	5	13.5±0.2	13.5±0.2	3.5±0.12	35.8±0.5	3.6±5%
FCST-L-SC6/3.5	6	6	13.5±0.2	13.5±0.2	3.5±0.12	35.8±0.5	3.6±5%
FCST-L-SC7/4	7	7	15.2±0.2	15.2±0.2	4±0.12	41.2±0.5	5.4±5%
FCST-L-SC8/6	8	8	15.2±0.2	15.2±0.2	4±0.12	41.2±0.5	4.7±5%
FCST-L-SC10/6	10	10	17.5±0.2	17.5±0.2	6±0.12	45.2±0.5	6.6±5%
FCST-L-SC10/8	10	10	17.5±0.2	17.5±0.2	8±0.12	45.2±0.5	6.7±5%
FCST-L-SC12/8	12	12	21.5±0.2	21.5±0.2	8±0.12	52.2±0.5	11.7±5%
FCST-L-SC12/10	12	12	21.5±0.2	21.5±0.2	10±0.12	52.2±0.5	11.8±5%
FCST-L-SC14/10	14	14	23.5±0.2	23.5±0.2	10±0.12	52.2±0.5	12.95±5%
FCST-L-SC16/12	16	16	25.3±0.2	25.3±0.2	12±0.12	52.2±0.5	14.5±0.2
FCST-L-SC20/16	20	20	32.7±0.3	32.7±0.3	16±0.12	55.9±0.5	27.8±0.2

*Note: For other sizes, please contact the sales department.

Accessories Optional

Locking Clip

Related Products



Telecom Manhole Chamber



Microduct Connector



Divisible Duct Sealing



Marker Ball

Better FTTx, Better Life.

Fiber Cable Solution Technology Co.,Ltd.

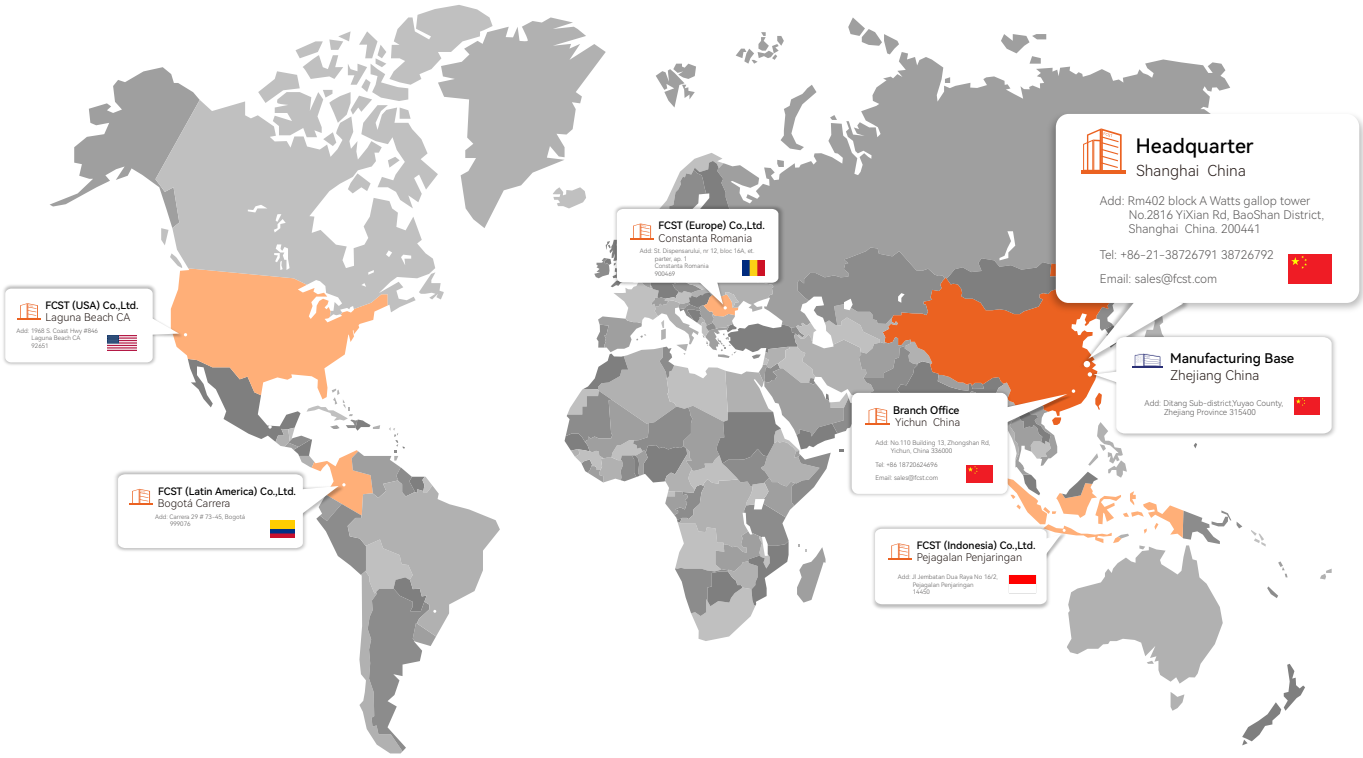

FCST - Better FTTx, Better Life.

At FCST, we manufacture top-quality microduct connectors, microduct closure, telecom manhole chambers and fiber splice boxes since 2003. Our products boast superior resistance to failure, corrosion, and deposits, and are designed for high performance in extreme temperatures. We prioritize sustainability with mechanical couplers and long-lasting durabili-ty.

FCST aspires to a more connected world, believing everyone deserves access to high-speed broadband. We're dedicat-ed to expanding globally, evolving our products, and tackling modern challenges with innovative solutions. As technology advances and connects billions more devices, FCST helps developing regions leapfrog outdated technologies with sustainable solutions, evolving from a small company to a global leader in future fiber cable needs.

Rm402 block A Watts gallop tower No.2816 YiXian Rd, BaoShan District, Shanghai 200441.
Tel:+86-21-38726791 +86-21-38726792 Fax:+86-21-38726793

www.fcst.com www.microductcoupler.com